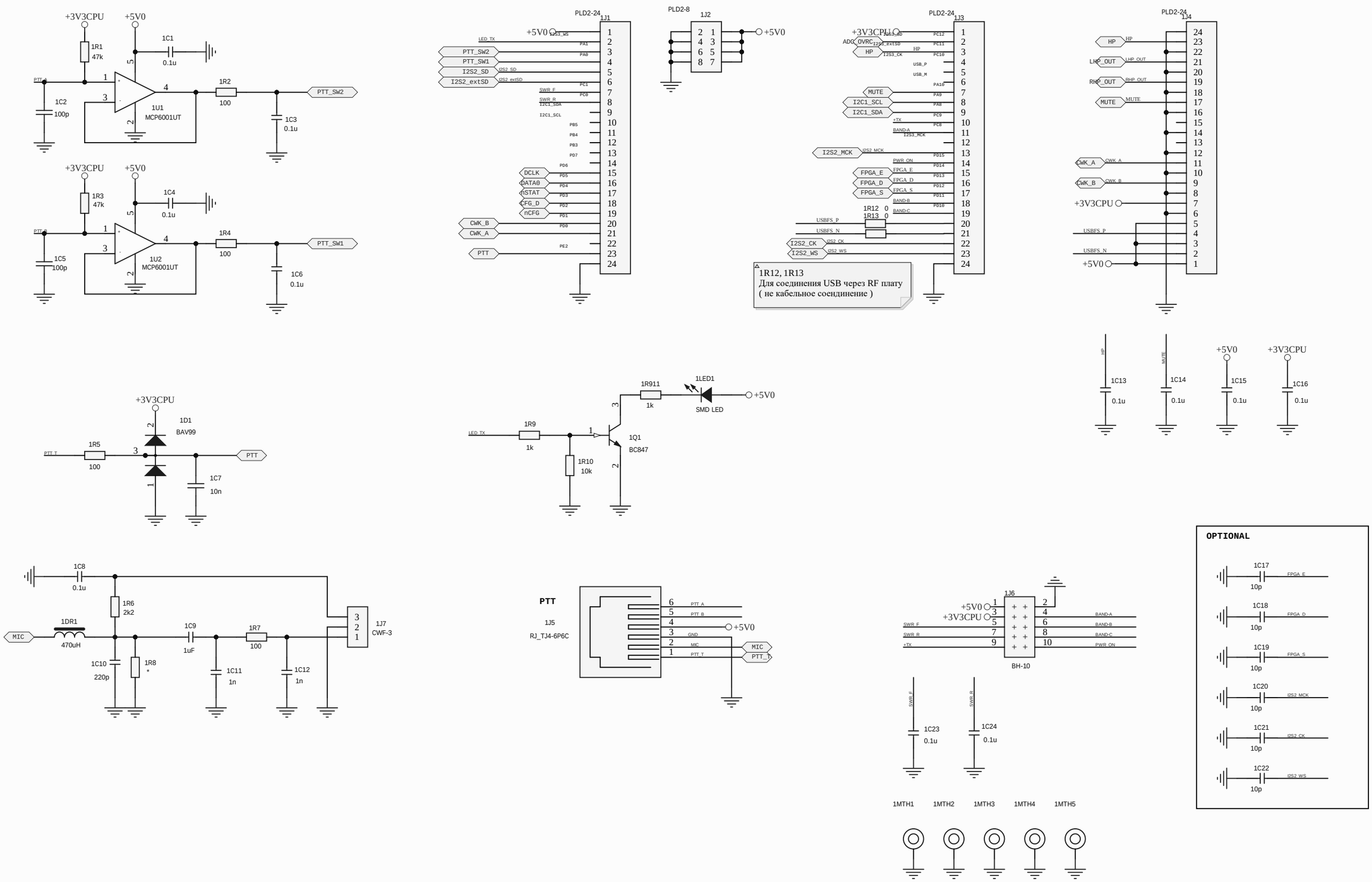
+3V3CPU
+5V0
1R1
47k
1C1
0.1u
PTT_A
1C2
100p
1U1
MCP6001UT
1R2
100
PTT_SW2
1C3
0.1u
1R3
47k
1C4
0.1u
1C5
100p
1U2
MCP6001UT
1R4
100
PTT_SW1
1C6
0.1u
PLD2-24
1J1
LED_TX
PTT_SW2
PTT_SW1
I2S2_SD
I2S2_extSD
DCLK
DATA0
nSTAT
nCFG_D
nCFG
CWK_B
CWK_A
PTT
PLD2-8
1J2
PLD2-24
1J3
ADC_OVRC
HP
MUTE
I2C1_SCL
I2C1_SDA
I2S2_MCK
FPGA_E
FPGA_D
FPGA_S
1R12 0
1R13 0
USBFS_P
USBFS_N
I2S2_CK
I2S2_WS
1R12, 1R13
Для соединения USB через RF плату
(не кабельное соединение)
PLD2-24
1J4
HP
LHP_OUT
RHP_OUT
MUTE
CWK_A
CWK_B
+3V3CPU
USBFS_P
USBFS_N
+5V0
1C13
0.1u
1C14
0.1u
+5V0
1C15
0.1u
+3V3CPU
1C16
0.1u
+3V3CPU
1D1
BAV99
1R5
100
PTT_T
PTT
1C7
10n
1R911
1k
1LED1
SMD LED
+5V0
1R9
1k
LED_TX
1Q1
BC847
1R10
10k
1C8
0.1u
1R6
2k2
MIC
1DR1
470uH
1C9
1uF
1R7
100
1J7
CWF-3
1C10
220p
1R8
*
1C11
1n
1C12
1n
PTT
1J5
RJ_TJ4-6P6C
PTT_A
PTT_B
+5V0
GND
MIC
PTT_T
MIC
PTT_T
1J6
+5V0
+3V3CPU
SWR_F
SWR_R
+TX
BAND-A
BAND-B
BAND-C
PWR_ON
BH-10
1C23
0.1u
1C24
0.1u
1MTH1
1MTH2
1MTH3
1MTH4
1MTH5
OPTIONAL
1C17
10p
FPGA_E
1C18
10p
FPGA_D
1C19
10p
FPGA_S
1C20
10p
I2S2_MCK
1C21
10p
I2S2_CK
1C22
10p
I2S2_WS

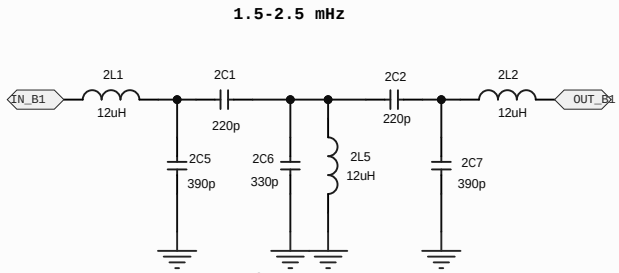
1.5-2.5 mHz
IN_B1
2L1
12uH
2C1
220p
2C2
220p
2L2
12uH
OUT_B1
2C5
390p
2C6
330p
2L5
12uH
2C7
390p

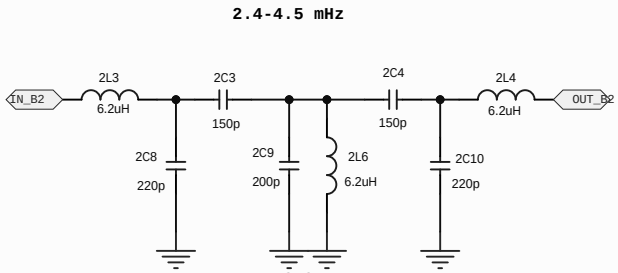
2.4-4.5 mHz
IN_B2
2L3
6.2uH
2C3
150p
2C4
150p
2L4
6.2uH
OUT_B2
2C8
220p
2C9
200p
2L6
6.2uH
2C10
220p

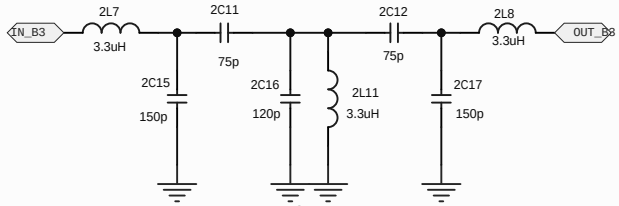
4.6-7.5 mHz
IN_B3
2L7
3.3uH
2C11
75p
2C12
75p
2L8
3.3uH
OUT_B3
2C15
150p
2C16
120p
2L11
3.3uH
2C17
150p

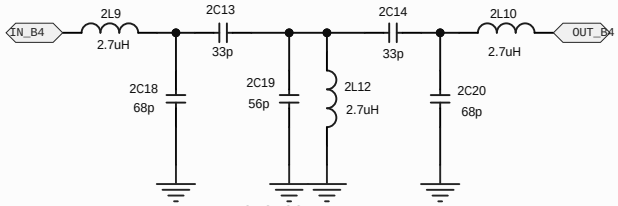
7.5-12.3 mHz
IN_B4
2L9
2.7uH
2C13
33p
2C14
33p
2L10
2.7uH
OUT_B4
2C18
68p
2C19
56p
2L12
2.7uH
2C20
68p

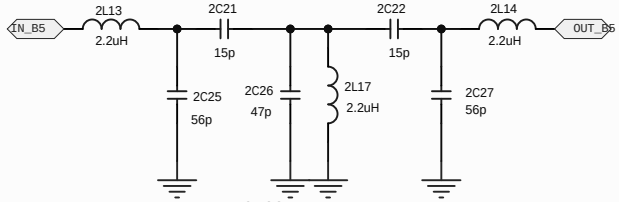
11-14.8 mHz
IN_B5
2L13
2.2uH
2C21
15p
2C22
15p
2L14
2.2uH
OUT_B5
2C25
56p
2C26
47p
2L17
2.2uH
2C27
56p

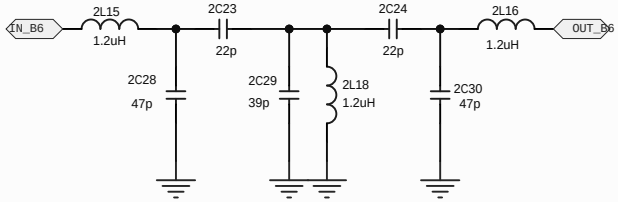
13.8-22.1 mHz
IN_B6
2L15
1.2uH
2C23
22p
2C24
22p
2L16
1.2uH
OUT_B6
2C28
47p
2C29
39p
2L18
1.2uH
2C30
47p

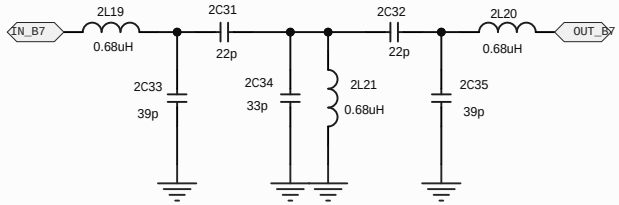
19-32 mHz
IN_B7
2L19
0.68uH
2C31
22p
2C32
22p
2L20
0.68uH
OUT_B7
2C33
39p
2C34
33p
2L21
0.68uH
2C35
39p

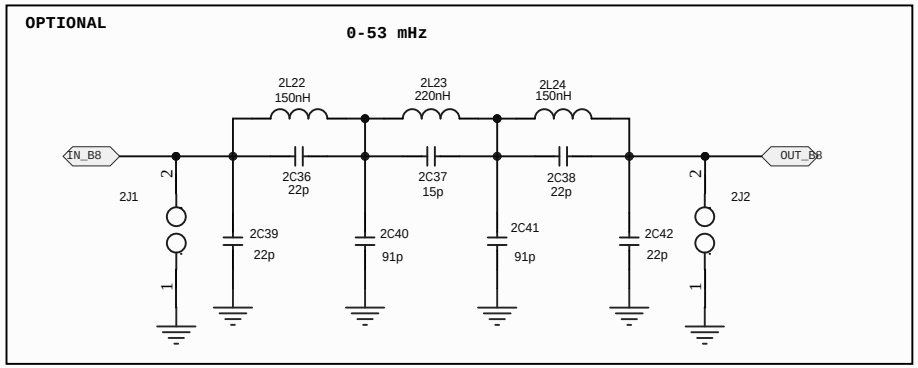
OPTIONAL
0-53 mHz
IN_B8
2L22
150nH
2L23
220nH
2L24
150nH
OUT_B8
2J1
2C36
22p
2C37
15p
2C38
22p
2J2
2C39
22p
2C40
91p
2C41
91p
2C42
22p

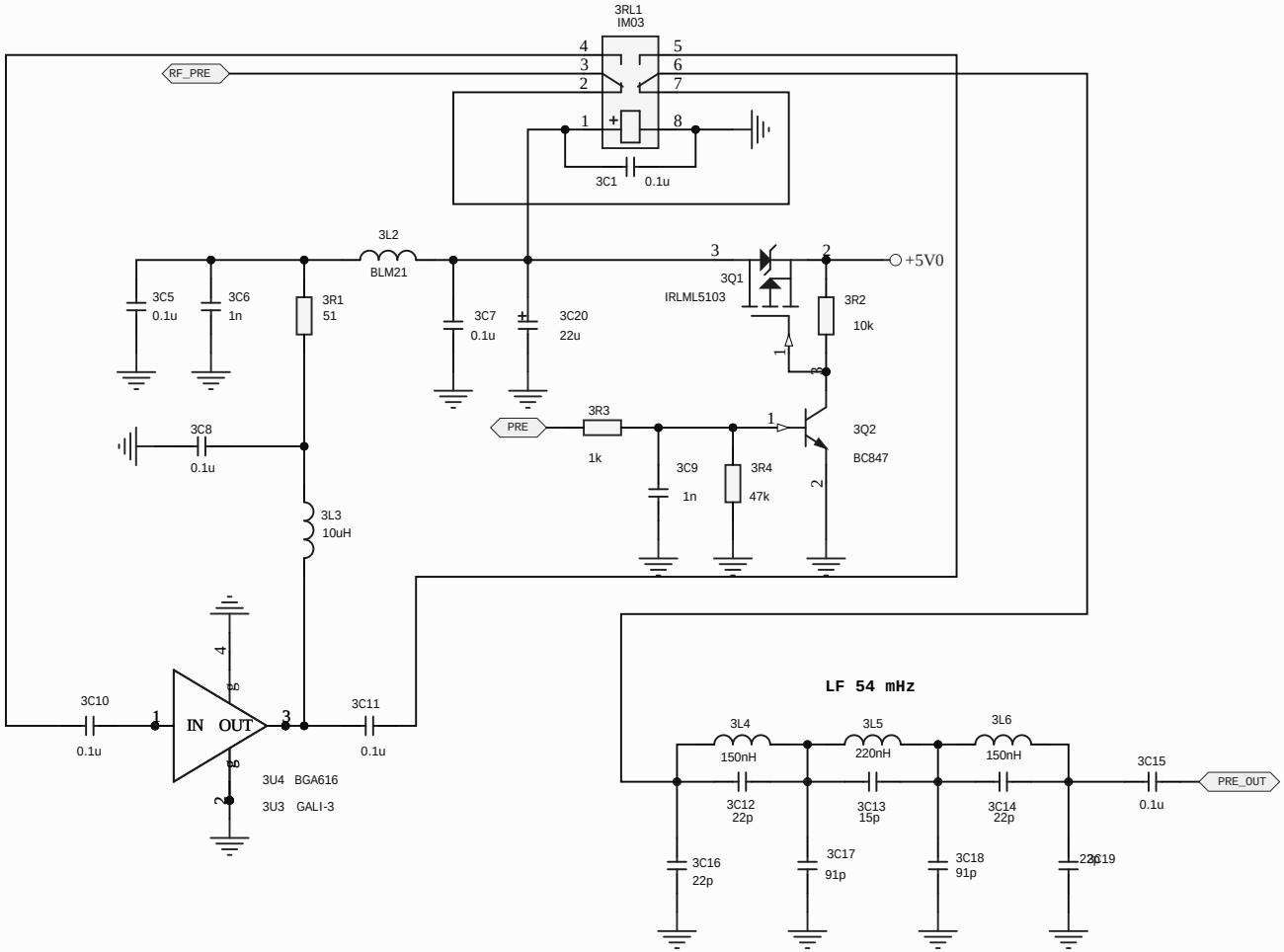
3RL1
IM03
RF_PRE
3C1
0.1u
3L2
BLM21
+5V0
3Q1
IRLML5103
3C5
0.1u
3C6
1n
3R1
51
3C7
0.1u
3C20
22u
3R2
10k
PRE
3R3
1k
3Q2
BC847
3C9
1n
3R4
47k
3C8
0.1u
3L3
10uH
3C10
0.1u
IN
OUT
3C11
0.1u
3U4 BGA616
3U3 GALI-3
LF 54 mHz
3L4
150nH
3L5
220nH
3L6
150nH
3C15
0.1u
PRE_OUT
3C12
22p
3C13
15p
3C14
22p
3C16
22p
3C17
91p
3C18
91p
3C19
22p

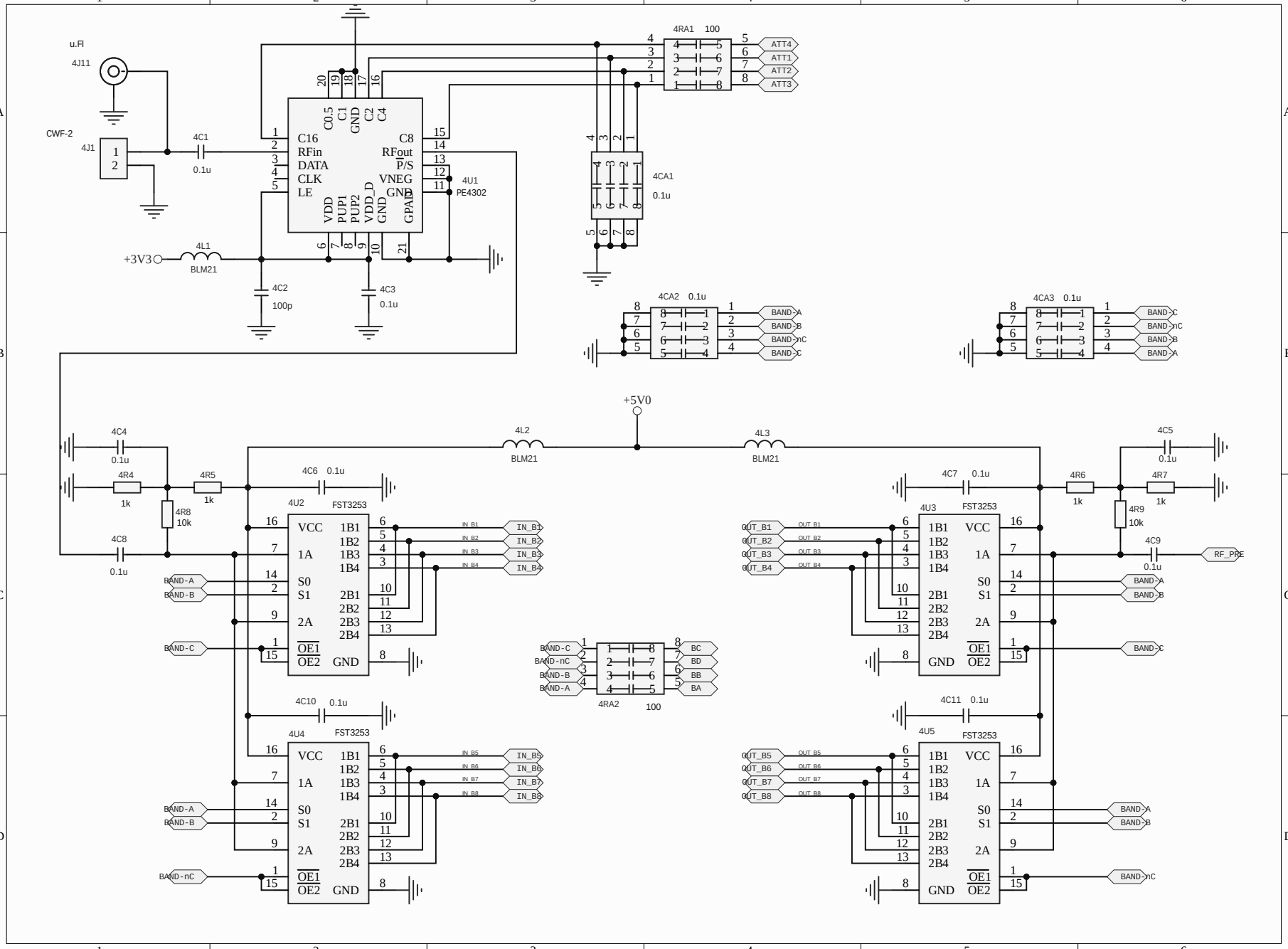
u.Fl
4J11
CWF-2
4J1
4C1
0.1u
4U1
PE4302
C16
RFin
DATA
CLK
LE
C8
RFout
P/S
VNEG
GND
C0.5
C1
GND
C2
C4
VDD
PUP1
PUP2
VDD_D
GND
GPAD
+3V3
4L1
BLM21
4C2
100p
4C3
0.1u
4RA1
100
ATT4
ATT1
ATT2
ATT3
4CA1
0.1u
4CA2
0.1u
BAND-A
BAND-B
BAND-nC
BAND-C
4CA3
0.1u
BAND-C
BAND-nC
BAND-B
BAND-A
+5V0
4L2
BLM21
4L3
BLM21
4C4
0.1u
4R4
1k
4R5
1k
4R8
10k
4C8
0.1u
4C6
0.1u
4U2
FST3253
VCC
1A
S0
S1
2A
OE1
OE2
GND
1B1
1B2
1B3
1B4
2B1
2B2
2B3
2B4
IN_B1
IN_B2
IN_B3
IN_B4
BAND-A
BAND-B
BAND-C
4C10
0.1u
4U4
FST3253
IN_B5
IN_B6
IN_B7
IN_B8
BAND-A
BAND-B
BAND-nC
4RA2
100
BAND-C
BAND-nC
BAND-B
BAND-A
BC
BD
BB
BA
4C7
0.1u
4R6
1k
4R7
1k
4R9
10k
4C5
0.1u
4C9
0.1u
RF_PRE
4U3
FST3253
OUT_B1
OUT_B2
OUT_B3
OUT_B4
BAND-A
BAND-B
BAND-C
4C11
0.1u
4U5
FST3253
OUT_B5
OUT_B6
OUT_B7
OUT_B8
BAND-A
BAND-B
BAND-nC

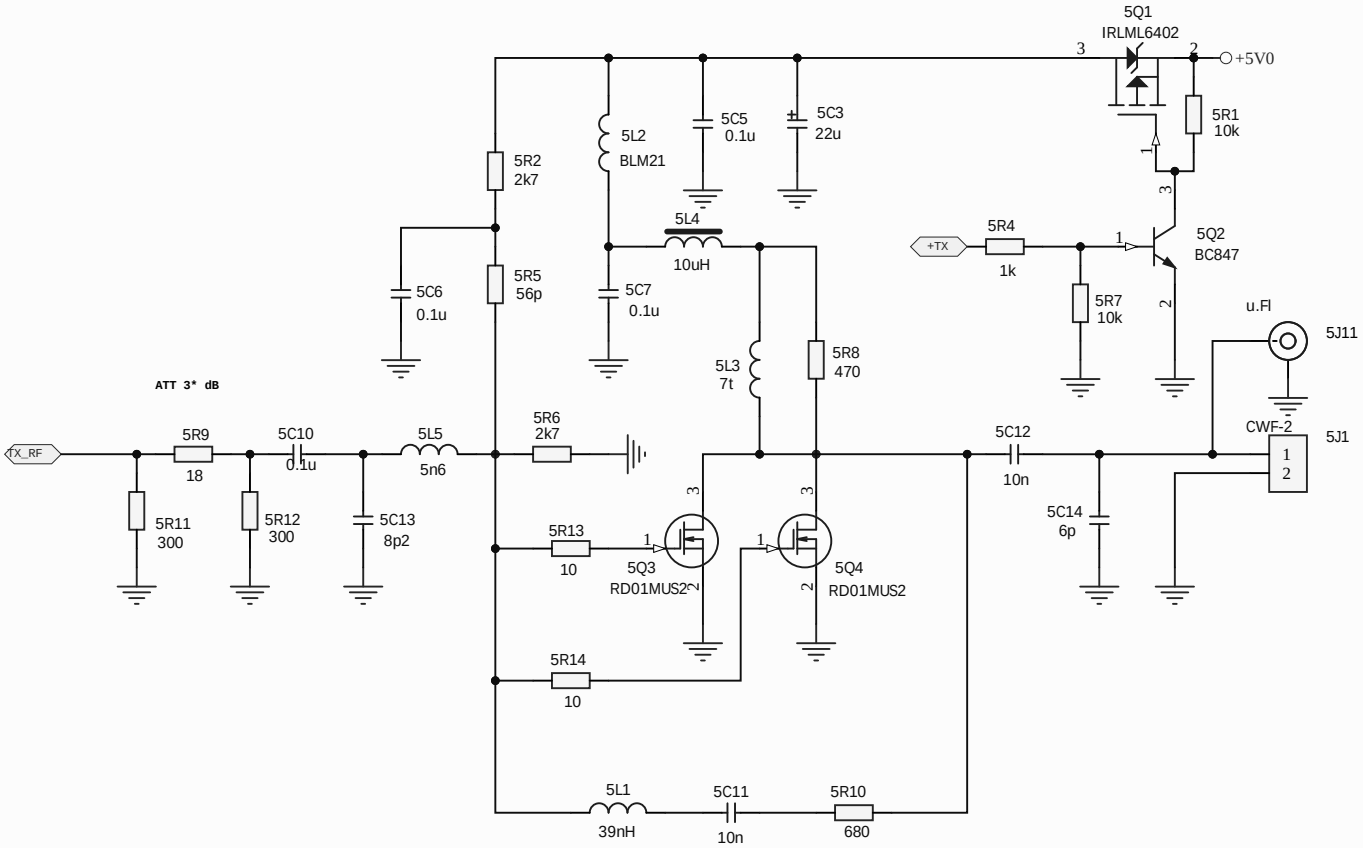
5Q1
IRLML6402
+5V0
5R1
10k
5C3
22u
5C5
0.1u
5L2
BLM21
5R2
2k7
5L4
10uH
5R4
1k
+TX
5Q2
BC847
5R7
10k
u.Fl
5J11
5C6
0.1u
5R5
56p
5C7
0.1u
5L3
7t
5R8
470
ATT 3* dB
TX_RF
5R9
18
5C10
0.1u
5L5
5n6
5R6
2k7
5C12
10n
CWF-2
5J1
5R11
300
5R12
300
5C13
8p2
5C14
6p
5R13
10
5Q3
RD01MUS2
5Q4
RD01MUS2
5R14
10
5L1
39nH
5C11
10n
5R10
680

I2S2_SD
I2S2_CK
I2S2_MCK
I2S2_WS
I2S2_extSD
ADC_OVRC
FPGA_E
FPGA_S
FPGA_D
+TX
DAC[0..13]
DAC_CLK
DAC_S
DAC_SHM
6U3
EP4CE10E22
FPGA_extSD
FPGA_SD
DCLK
DATA0
nCFG
nSTAT
DATA1
FnCE
nCE
CFG_D
LED1
LED2
PRE
ATT4
ATT1
ATT2
ATT3
BA
BB
BD
BC
LO_CTL
ADC_PGA
ADC_CLK
ADC_OVR
ADC2_CLK
ADC[0..13]
6J2
PLD2-10
6RA2 100
6RA3 100
+5V0
+2V5
+1V2_PLL
+1V2
+3V3
6RA1 10k
OPTIONAL
6J1
BH-10
6U2
MP25P16
6c41
0.1u
6R1 22
6R2 1k
6R3 1k
6LED1 SMD RED
6LED2 SMD RED
6R4
1k
6R5
1k
6U4
MCP1603-330
6L1 4.7uH
6SJ1
6C1 4.7u
6C2 4.7u
6C3 6C4 6C5 6C6 6C7 6C8 6C9 6C10 6C11 6C12 6C13
0.1u
6U5
MCP1603-120
6L2 4.7uH
6SJ2
6C14 4.7u
6C15 4.7u
6C16 6C17
6C19 6C20 6C21 6C22 6C23 6C24 6C25 6C26 6C27 6C28 6C29
6U6
MCP1700-25
6C30 4.7u
6C31 0.1u
6SJ3
6C33 0.1u
6C36 0.1u
6L3 BLM21
6C38 0.1u
6C40 0.1u
6U2-1 LM1117-3.3
6U3-1 LM1117-1.2
6U4-1 LM1117-2.5

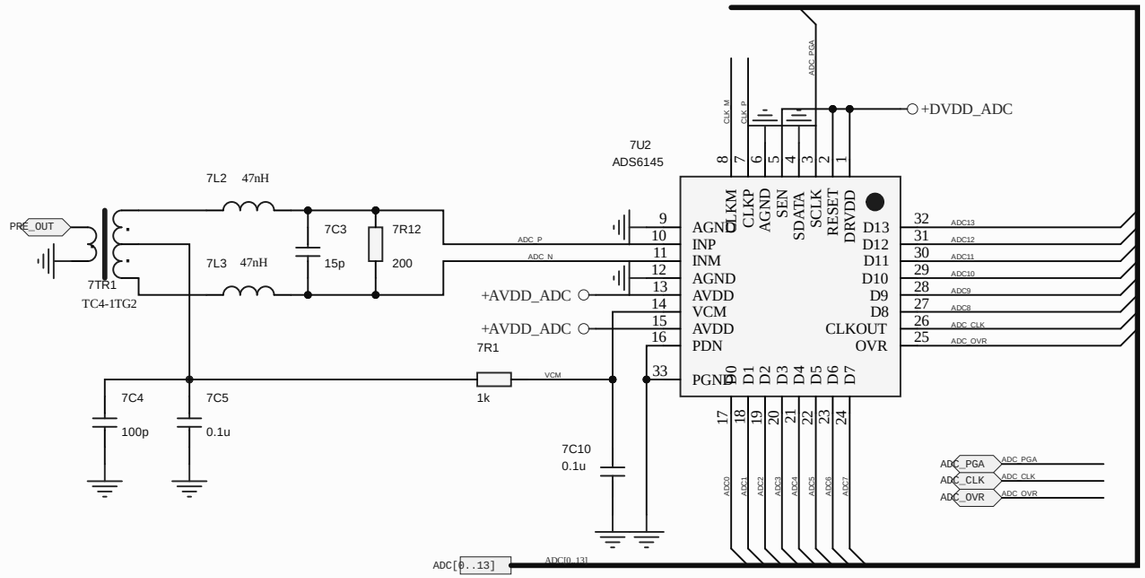
7U2
ADS6145
PRE_OUT
7TR1
TC4-1TG2
7L2 47nH
7L3 47nH
7C3
15p
7R12
200
ADC_P
ADC_N
+AVDD_ADC
+AVDD_ADC
7R1
1k
VCM
7C4
100p
7C5
0.1u
7C10
0.1u
+DVDD_ADC
ADC_PGA
CLK_M
CLK_P
AGND
INP
INM
AGND
AVDD
VCM
AVDD
PDN
PGND
CLKM
CLKP
AGND
SEN
SDATA
SCLK
RESET
DRVDD
D13
D12
D11
D10
D9
D8
CLKOUT
OVR
D0
D1
D2
D3
D4
D5
D6
D7
ADC_PGA
ADC_CLK
ADC_OVR
ADC[0..13]

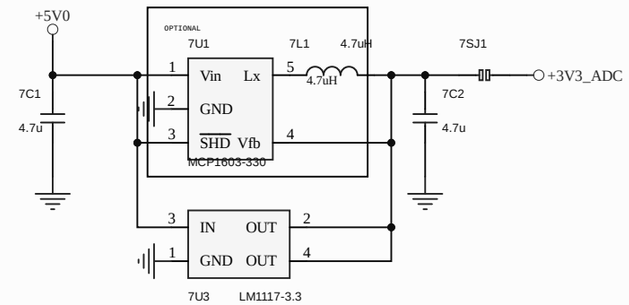
+5V0
OPTIONAL
7U1
7L1 4.7uH
7SJ1
+3V3_ADC
7C1
4.7u
Vin
Lx
GND
SHD
Vfb
MCP1603-330
7C2
4.7u
IN
OUT
GND
OUT
7U3 LM1117-3.3

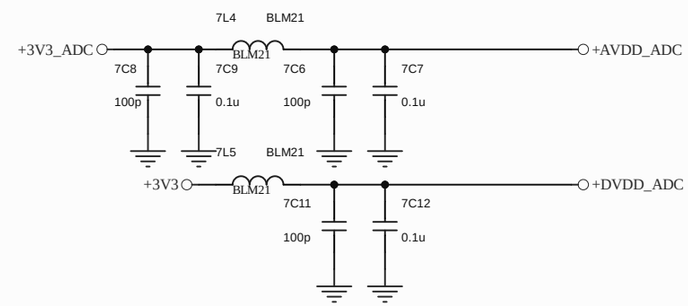
+3V3_ADC
7L4 BLM21
+AVDD_ADC
7C8
100p
7C9
0.1u
7C6
100p
7C7
0.1u
7L5 BLM21
+3V3
BLM21
+DVDD_ADC
7C11
100p
7C12
0.1u

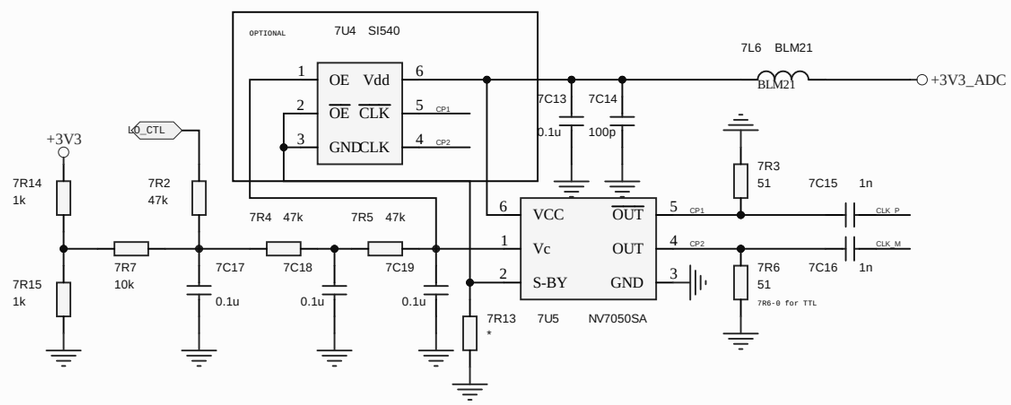
OPTIONAL
7U4 SI540
OE
Vdd
OE
CLK
GND
CLK
CP1
CP2
7L6 BLM21
+3V3_ADC
7C13
0.1u
7C14
100p
+3V3
LD_CTL
7R14
1k
7R15
1k
7R2
47k
7R7
10k
7C17
0.1u
7R4 47k
7C18
0.1u
7R5 47k
7C19
0.1u
7R13
*
VCC
OUT
Vc
OUT
S-BY
GND
7U5 NV7050SA
7R3
51
7C15 1n
CLK_P
7R6
51
7C16 1n
CLK_M
7R6-0 for TTL

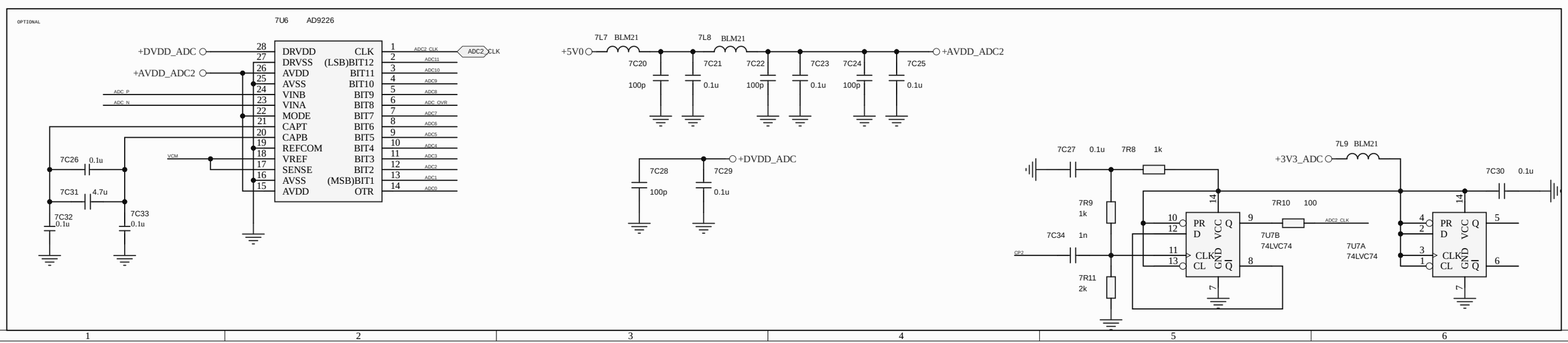
OPTIONAL
7U6 AD9226
+DVDD_ADC
+AVDD_ADC2
ADC_P
ADC_N
VCM
7C26 0.1u
7C31 4.7u
7C32
0.1u
7C33
0.1u
DRVDD
DRVSS
AVDD
AVSS
VINB
VINA
MODE
CAPT
CAPB
REFCOM
VREF
SENSE
AVSS
AVDD
CLK
(LSB)BIT12
BIT11
BIT10
BIT9
BIT8
BIT7
BIT6
BIT5
BIT4
BIT3
BIT2
(MSB)BIT1
OTR
ADC2_CLK
ADC2_CLK
+5V0
7L7 BLM21
7L8 BLM21
+AVDD_ADC2
7C20
100p
7C21
0.1u
7C22
100p
7C23
0.1u
7C24
100p
7C25
0.1u
7C28
100p
7C29
0.1u
+DVDD_ADC
7C27 0.1u
7R8 1k
7R9
1k
7C34 1n
7R11
2k
CP2
PR
D
VCC
Q
CLK
CL
GND
Q
7U7B
74LVC74
7R10 100
ADC2_CLK
7U7A
74LVC74
7L9 BLM21
+3V3_ADC
7C30 0.1u

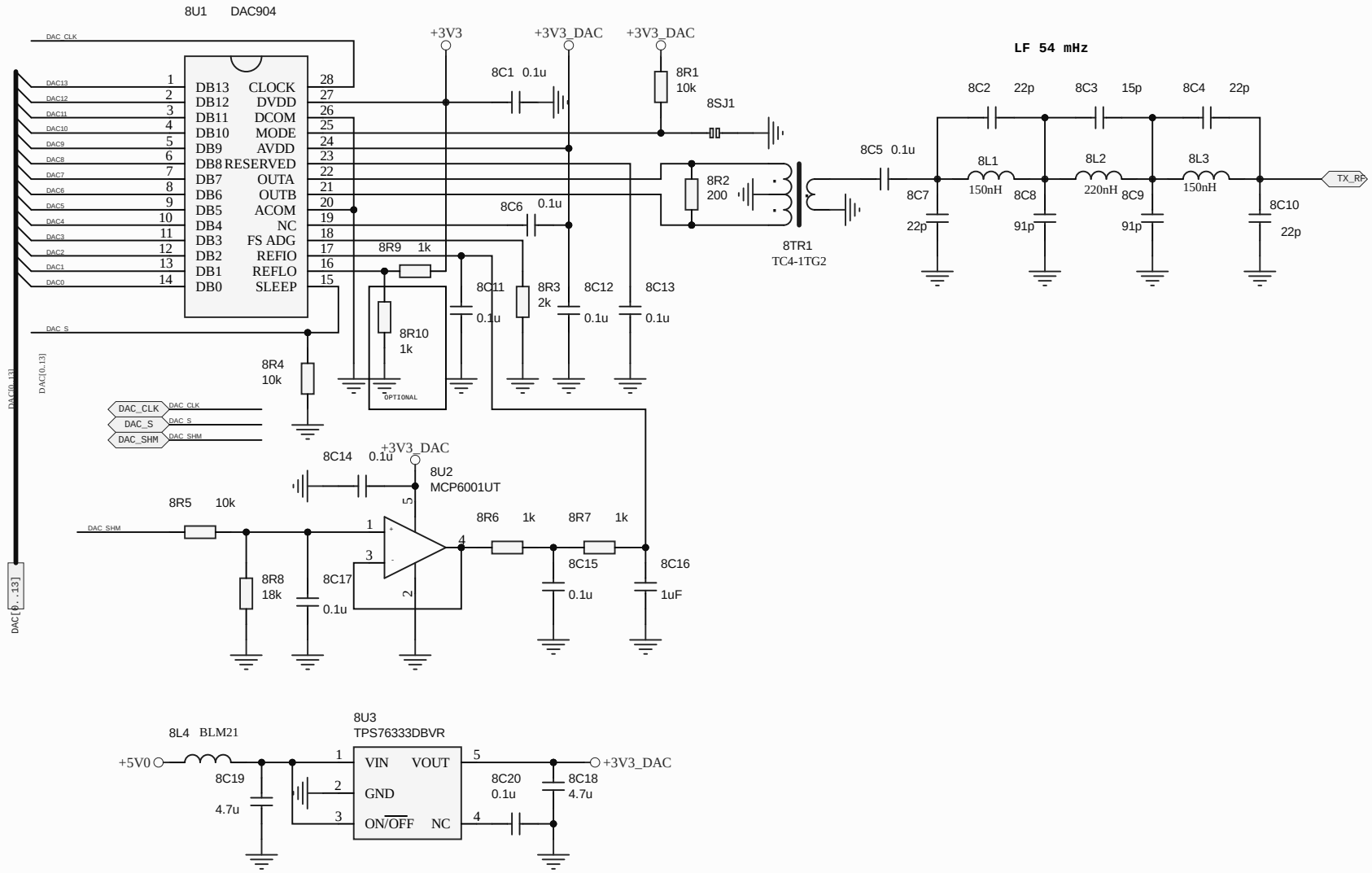
8U1 DAC904
DB13 CLOCK
DB12 DVDD
DB11 DCOM
DB10 MODE
DB9 AVDD
DB8 RESERVED
DB7 OUTA
DB6 OUTB
DB5 ACOM
DB4 NC
DB3 FS ADG
DB2 REFIO
DB1 REFLO
DB0 SLEEP
DAC_CLK
DAC_S
DAC[0..13]
+3V3
+3V3_DAC
8C1 0.1u
8R1 10k
8SJ1
8R2 200
8C6 0.1u
8R9 1k
8R10 1k
OPTIONAL
8C11 0.1u
8R3 2k
8C12 0.1u
8C13 0.1u
8R4 10k
DAC_SHM
8C14 0.1u
8U2 MCP6001UT
8R5 10k
8R8 18k
8C17 0.1u
8R6 1k
8R7 1k
8C15 0.1u
8C16 1uF
LF 54 mHz
8C2 22p
8C3 15p
8C4 22p
8C5 0.1u
8L1 150nH
8L2 220nH
8L3 150nH
8C7 22p
8C8 91p
8C9 91p
8C10 22p
8TR1 TC4-1TG2
TX_RF
8U3 TPS76333DBVR
8L4 BLM21
+5V0
8C19 4.7u
VIN
VOUT
GND
ON/OFF
NC
8C20 0.1u
8C18 4.7u

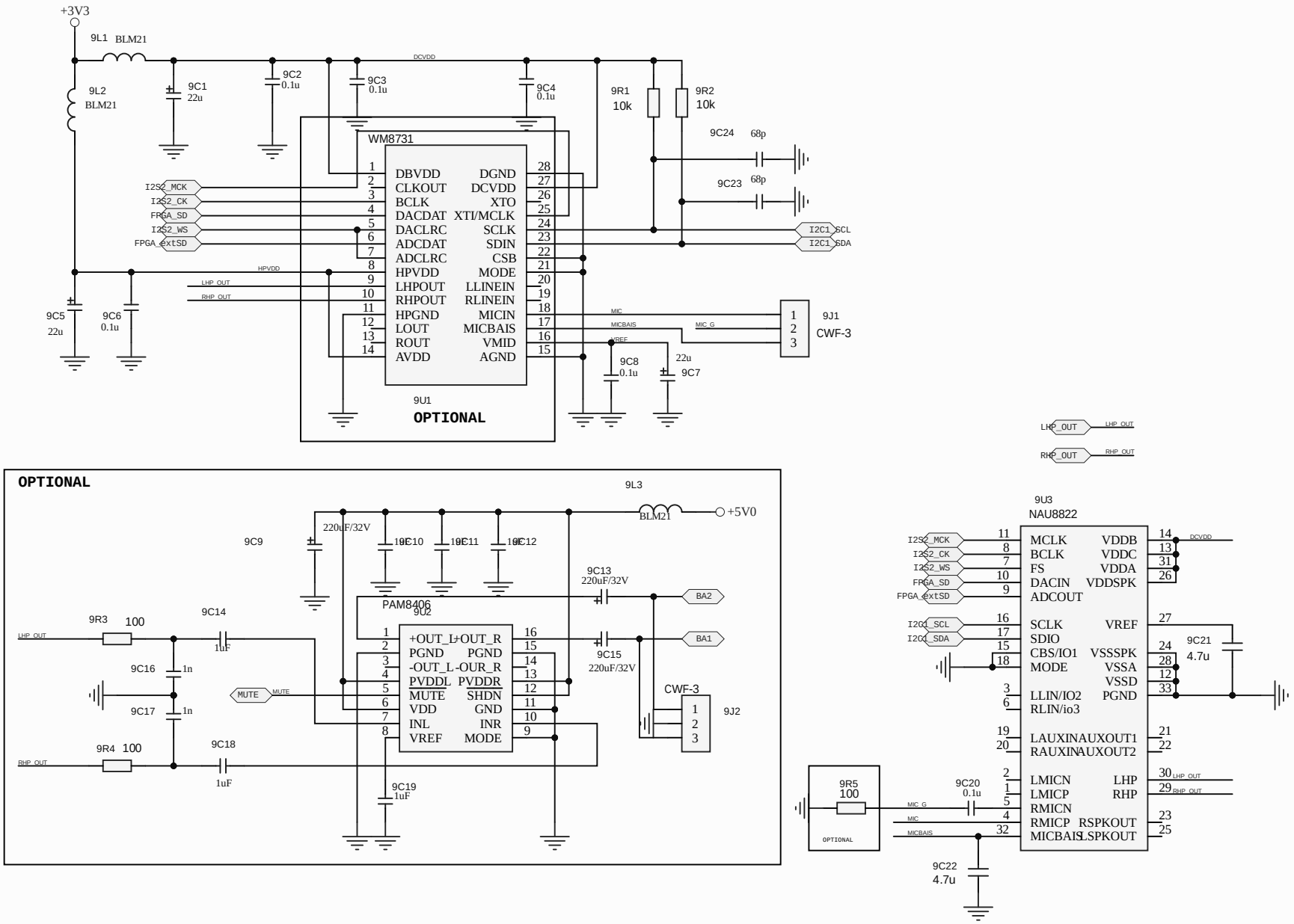
+3V3
9L1 BLM21
9L2 BLM21
9C1 22u
9C2 0.1u
9C3 0.1u
DCVDD
9C4 0.1u
9R1 10k
9R2 10k
9C24 68p
9C23 68p
WM8731
DBVDD DGND
CLKOUT DCVDD
BCLK XTO
DACDAT XTI/MCLK
DACLRC SCLK
ADCDAT SDIN
ADCLRC CSB
HPVDD MODE
LHPOUT LLINEIN
RHPOUT RLINEIN
HPGND MICIN
LOUT MICBAIS
ROUT VMID
AVDD AGND
I2S2_MCK
I2S2_CK
FPGA_SD
I2S2_WS
FPGA_extSD
I2C1_SCL
I2C1_SDA
HPVDD
LHP_OUT
RHP_OUT
9C5 22u
9C6 0.1u
MIC
MICBAIS
MIC_G
VREF
9C8 0.1u
9C7 22u
9J1 CWF-3
9U1
OPTIONAL
LHP_OUT
RHP_OUT
OPTIONAL
9L3 BLM21
+5V0
9C9 220uF/32V
9C10 10u
9C11 10u
9C12 10u
9C13 220uF/32V
BA2
BA1
PAM8406 9U2
9R3 100
9C14 1uF
9C16 1n
9C17 1n
MUTE
9R4 100
9C18 1uF
9C15 220uF/32V
9C19 1uF
CWF-3 9J2
+OUT_L +OUT_R
PGND PGND
-OUT_L -OUR_R
PVDDL PVDDR
MUTE SHDN
VDD GND
INL INR
VREF MODE
9U3 NAU8822
MCLK VDDB
BCLK VDDC
FS VDDA
DACIN VDDSPK
ADCOUT
SCLK VREF
SDIO
CBS/IO1 VSSSPK
MODE VSSA
VSSD
LLIN/IO2 PGND
RLIN/io3
LAUXIN AUXOUT1
RAUXIN AUXOUT2
LMICN LHP
LMICP RHP
RMICN
RMICP RSPKOUT
MICBAIS LSPKOUT
9C21 4.7u
9R5 100
9C20 0.1u
9C22 4.7u
MIC_G
MIC
MICBAIS

Designator	Quantity	Value	Package
1C1, 1C3, 1C4, 1C6, 1C8, 1C13, 1C14, 1C15, 1C16, 1C23, 1C24, 3C1, 3C5, 3C7, 3C8, 3C10, 3C11, 3C15, 4C1, 4C3, 4C4, 4C5, 4C6, 4C7, 4C8, 4C9, 4C10, 4C11, 5C5, 5C6, 5C7, 5C10, 6C3, 6C4, 6C5, 6C6, 6C7, 6C8, 6C9, 6C10, 6C11, 6C12, 6C13, 6C16, 6C17, 6C19, 6C20, 6C21, 6C22, 6C23, 6C24, 6C25, 6C26, 6C27, 6C28, 6C29, 6C31, 6C33, 6C36, 6C38, 6C40, 6C41, 7C5, 7C7, 7C9, 7C10, 7C12, 7C13, 7C17, 7C18, 7C19, 7C21, 7C23, 7C25, 7C26, 7C27, 7C29, 7C30, 7C32, 7C33, 8C1, 8C5, 8C6, 8C11, 8C12, 8C13, 8C14, 8C15, 8C17, 8C20, 9C2, 9C3, 9C4, 9C6, 9C8, 9C20	96	0.1u	SMD0603
1C2, 1C5, 4C2, 7C3, 7C4, 7C6, 7C8, 7C11, 7C14, 7C20, 7C22, 7C24, 7C28	13	100p	SMD0603
1C7, 5C11, 5C12	3	10n	SMD0603
1C9, 8C16, 9C10, 9C11, 9C12, 9C14, 9C18, 9C19	8	1uF	SMD0603
1C10	1	220p	SMD0603
1C11, 1C12, 3C6, 3C9, 7C15, 7C16, 7C34, 9C16, 9C17	9	1n	SMD0603
1C17, 1C18, 1C19, 1C20, 1C21, 1C22	6	10p	SMD0603
1D1	1	BAV99	SOT23
1DR1	1	470uH	SMD1210
1J1, 1J3, 1J4	3	PLD2-24	PLD2-24
1J2	1	PLD2-8	PLD2-8
1J5	1	RJ_TJ4-6P6C	RJ_TJ4-6P6C
1J6, 6J1	2	BH-10	BH-10
1J7, 9J1, 9J2	3	CWF-3	CWF-3
1LED1	1	SMD LED	SMD0603
1Q1, 3Q2, 5Q2	3	BC847	SOT23
1R1, 1R3, 3R4, 7R2, 7R4, 7R5	6	47k	SMD0603

Designator	Quantity	Value	Package
1R2, 1R4, 1R5, 1R7, 7R10, 9R3, 9R4, 9R5	8	100	SMD0603
1R6	1	2k2	SMD0603
1R8, 7R13	2		SMD0603
1R9, 1R911, 3R3, 4R4, 4R5, 4R6, 4R7, 5R4, 6R2, 6R3, 6R4, 6R5, 7R1, 7R8, 7R9, 7R14, 7R15, 8R6, 8R7, 8R9, 8R10	21	1k	SMD0603
1R10, 3R2, 4R8, 4R9, 5R1, 5R7, 7R7, 8R1, 8R4, 8R5, 9R1, 9R2	12	10k	SMD0603
1R12, 1R13	2	0	SMD0603
1U1, 1U2, 8U2	3	MCP6001UT	SOT23-5
2C1, 2C2, 2C8, 2C10	4	220p	SMD0805
2C3, 2C4, 2C15, 2C17	4	150p	SMD0805
2C5, 2C7	2	390p	SMD0805
2C6	1	330p	SMD0805
2C9	1	200p	SMD0805
2C11, 2C12	2	75p	SMD0805
2C13, 2C14, 2C34	3	33p	SMD0805
2C16	1	120p	SMD0805
2C18, 2C20	2	68p	SMD0805
2C19, 2C25, 2C27	3	56p	SMD0805
2C21, 2C22, 2C37, 3C13	4	15p	SMD0805
2C23, 2C24, 2C31, 2C32, 2C36, 2C38, 2C39, 2C42, 3C12, 3C14, 3C16, 3C19	12	22p	SMD0805
2C26, 2C28, 2C30	3	47p	SMD0805
2C29, 2C33, 2C35	3	39p	SMD0805
2C40, 2C41, 3C17, 3C18	4	91p	SMD0805
2J1, 2J2	2	PLS-2	PLS-2
2L1, 2L2, 2L5	3	12uH	SMD1210/EC24
2L3, 2L4, 2L6	3	6.2uH	SMD1210/EC24
2L7, 2L8, 2L11	3	3.3uH	SMD1210/EC24
2L9, 2L10, 2L12	3	2.7uH	SMD1210/EC24
2L13, 2L14, 2L17	3	2.2uH	SMD1210/EC24
2L15, 2L16, 2L18	3	1.2uH	SMD1210/EC24
2L19, 2L20, 2L21	3	0.68uH	SMD1210/EC24
2L22, 2L24, 3L4, 3L6, 8L1, 8L3	6	150nH	SMD0805
2L23, 3L5, 8L2	3	220nH	SMD0805
3C20, 5C3, 9C1, 9C5, 9C7	5	22u	SMA
3L2, 4L1, 4L2, 4L3, 5L2, 6L3, 7L4, 7L5, 7L6, 7L7, 7L8, 7L9, 8L4, 9L1, 9L2, 9L3	16	BLM21	SMD0805
3L3	1	10uH	SMD1210

Designator	Quantity	Value	Package
3Q1	1	IRLML5103	SOT23
3R1, 7R3, 7R6	3	51	SMD0603
3RL1	1	IM03	
3U3	1	GALI-3	SOT89
3U4	1	BGA616	SOT343
4CA1, 4CA2, 4CA3	3	0.1u	0612
4J1, 5J1	2	CWF-2	CWF-2
4J11, 5J11	2	u.FI	u.FI
4RA1, 4RA2, 6RA2, 6RA3	4	100	0612
4U1	1	PE4302	QFN20
4U2, 4U3, 4U4, 4U5	4	FST3253	SOG.65M/16/(TSSOP)
5C13	1	8p2	SMD0603
5C14	1	6p	SMD0603
5L1	1	39nH	SMD0603
5L3	1	7t	
5L4	1	10uH	CDRH74
5L5	1	5n6	SMD0603
5Q1	1	IRLML6402	SOT23
5Q3, 5Q4	2	RD01MUS2	SOT89
5R2, 5R6	2	2k7	SMD0603
5R5	1	56p	SMD0603
5R8	1	470	SMD0805
5R9	1	18	SMD0603
5R10	1	680	SMD0603
5R11, 5R12	2	300	SMD0603
5R13, 5R14	2	10	SMD0603
6C1, 6C2, 6C14, 6C15, 6C30, 7C1, 7C2, 7C31, 8C18, 8C19, 9C21, 9C22	12	4.7u	SMD0805
6J2	1	PLD2-10	PLD2-10
6L1, 6L2, 7L1	3	4.7uH	SMD1210
6LED1, 6LED2	2	SMD RED	SMD0603
6R1	1	22	SMD0603
6RA1	1	10k	0612
6SJ1, 6SJ2, 6SJ3, 7SJ1, 8SJ1	5	JP_pl	
6U2	1	MP25P16	SOIC_8
6U2-1, 7U3	2	LM1117-3.3	SOT223
6U3	1	EP4CE10E22	TQFP144
6U3-1	1	LM1117-1.2	SOT223
6U4-1	1	LM1117-2.5	SOT223
6U4, 7U1	2	MCP1603-330	SOT23-5L
6U5	1	MCP1603-120	SOT23-5L
6U6	1	MCP1700-25	SOT23
7L2, 7L3	2	47nH	SMD0805
7R11, 8R3	2	2k	SMD0603
7R12, 8R2	2	200	SMD0603
7TR1, 8TR1	2	TC4-1TG2	
7U2	1	ADS6145	QFN32
7U4	1	SI540	SI540
7U5	1	NV7050SA	NV7050

Designator	Quantity	Value	Package
7U6	1	AD9226	SSOP28_0.65_7.8
7U7	1	74LVC74	SOG.050/14/WG.244/L.325
8C2, 8C4, 8C7, 8C10	4	22p	SMD0603
8C3	1	15p	SMD0603
8C8, 8C9	2	91p	SMD0603
8R8	1	18k	SMD0603
8U1	1	DAC904	TSSOP28_4.5_9.8
8U3	1	TPS76333DBVR	SOT23-5
9C9, 9C13, 9C15	3	220uF/32V	
9C23, 9C24	2	68p	SMD0603
9U1	1	WM8731	SSOP28_0.65_7.8
9U2	1	PAM8406	SOIC_16
9U3	1	NAU8822	QFN32_PAD

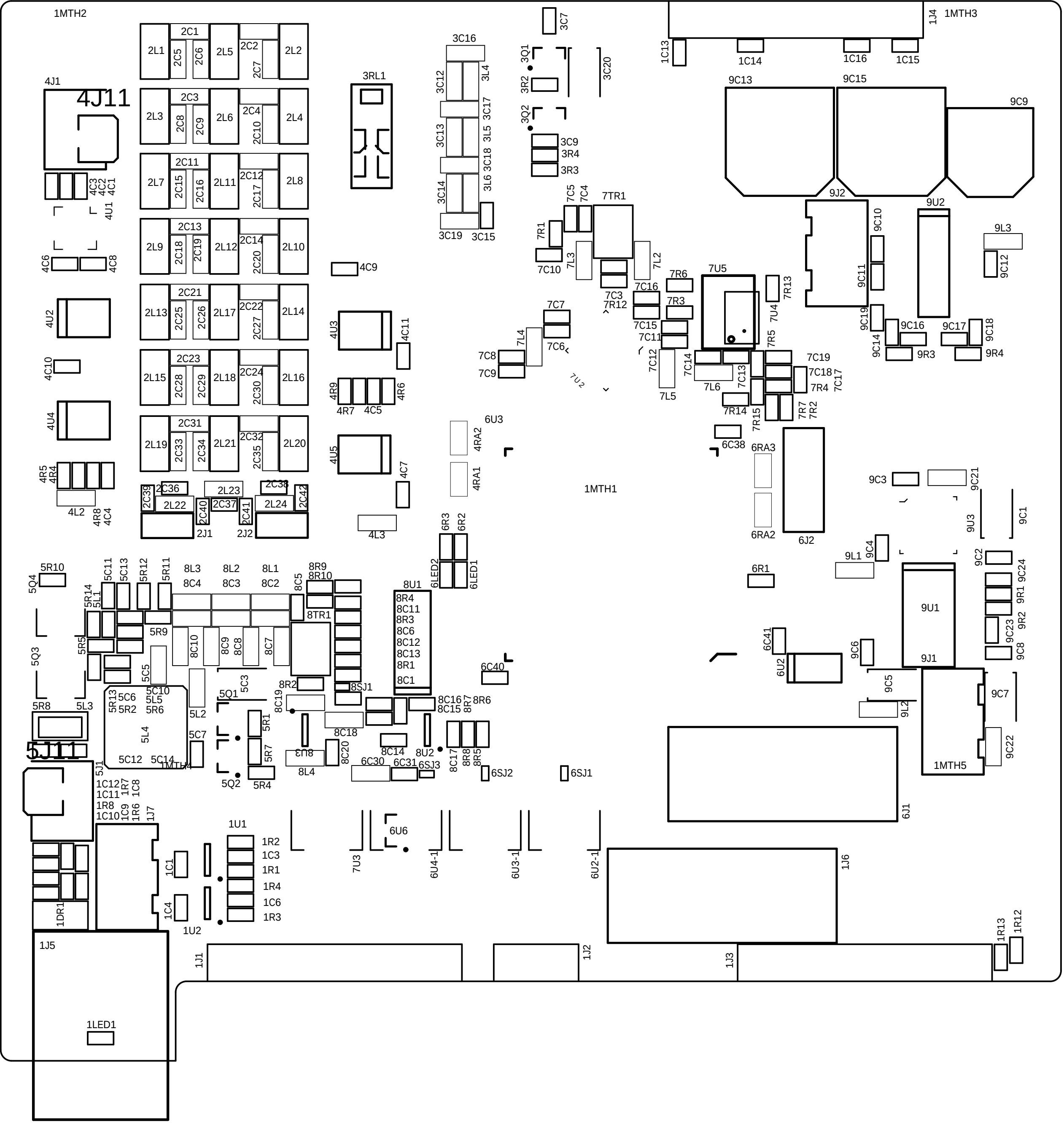
1MTH2
1MTH3
1J4
4J1
4J11
5J11
1MTH1
1MTH4
1MTH5
1DR1
1LED1
1J5
1J1
1J2
1J3
1J6
1J7
6J1
6J2
9J1
9J2
1U1
1U2
2J1
2J2
2L1
2L2
2L3
2L4
2L5
2L6
2L7
2L8
2L9
2L10
2L11
2L12
2L13
2L14
2L15
2L16
2L17
2L18
2L19
2L20
2L21
2L22
2L23
2L24
2C1
2C2
2C3
2C4
2C5
2C6
2C7
2C8
2C9
2C10
2C11
2C12
2C13
2C14
2C15
2C16
2C17
2C18
2C19
2C20
2C21
2C22
2C23
2C24
2C25
2C26
2C27
2C28
2C29
2C30
2C31
2C32
2C33
2C34
2C35
2C36
2C37
2C38
2C39
2C40
2C41
2C42
3RL1
3C16
3C12
3L4
3C17
3C13
3L5
3C18
3L6
3C14
3C19
3C15
3C7
3Q1
3R2
3Q2
3C20
3C9
3R4
3R3
4C9
4U3
4C11
4R9
4R7
4C5
4R6
4U5
4C7
4RA2
4RA1
4L3
6U3
6R3
6R2
6LED2
6LED1
7TR1
7C5
7C4
7R1
7C10
7L3
7L2
7C3
7R12
7C16
7R6
7R3
7U5
7R13
7U4
7C15
7C11
7C12
7L5
7C14
7L6
7C13
7R5
7C19
7C18
7R4
7C17
7R14
7R15
7R7
7R2
7C7
7L4
7C6
7C8
7C9
7U2
6C38
6RA3
6RA2
9C13
9C15
9C9
9C10
9C11
9U2
9L3
9C12
9C19
9C14
9C16
9R3
9C17
9R4
9C18
9C3
9C21
9U3
9C1
9L1
9C4
9C2
9C24
9R1
9R2
9C23
9C8
6R1
6C41
6U2
9C6
9C5
9L2
9C7
9C22
1C13
1C14
1C16
1C15
5Q4
5R10
5R14
5L1
5C11
5C13
5R12
5R11
8L3
8C4
8L2
8C3
8L1
8C2
8C5
8R9
8R10
8TR1
8U1
8R4
8C11
8R3
8C6
8C12
8C13
8R1
8C1
6C40
5R9
5R5
5Q3
5C5
8C10
8C9
8C8
8C7
5C3
5Q1
8R2
8SJ1
8C19
8C16
8C15
8R7
8R6
5R8
5L3
5R13
5C6
5R2
5R6
5L5
5C10
5L2
5R1
8C18
5L4
5C7
5R7
8U3
8C20
8U2
8C17
8R8
8R5
5C12
5C14
8L4
6C30
6C31
6SJ3
6SJ2
6SJ1
5Q2
5R4
5J1
1C12
1C11
1R8
1C10
1R7
1C8
1C9
1R6
1J7
1C1
1C4
1R2
1C3
1R1
1R4
1C6
1R3
6U6
7U3
6U4-1
6U3-1
6U2-1
1R13
1R12

R3DI

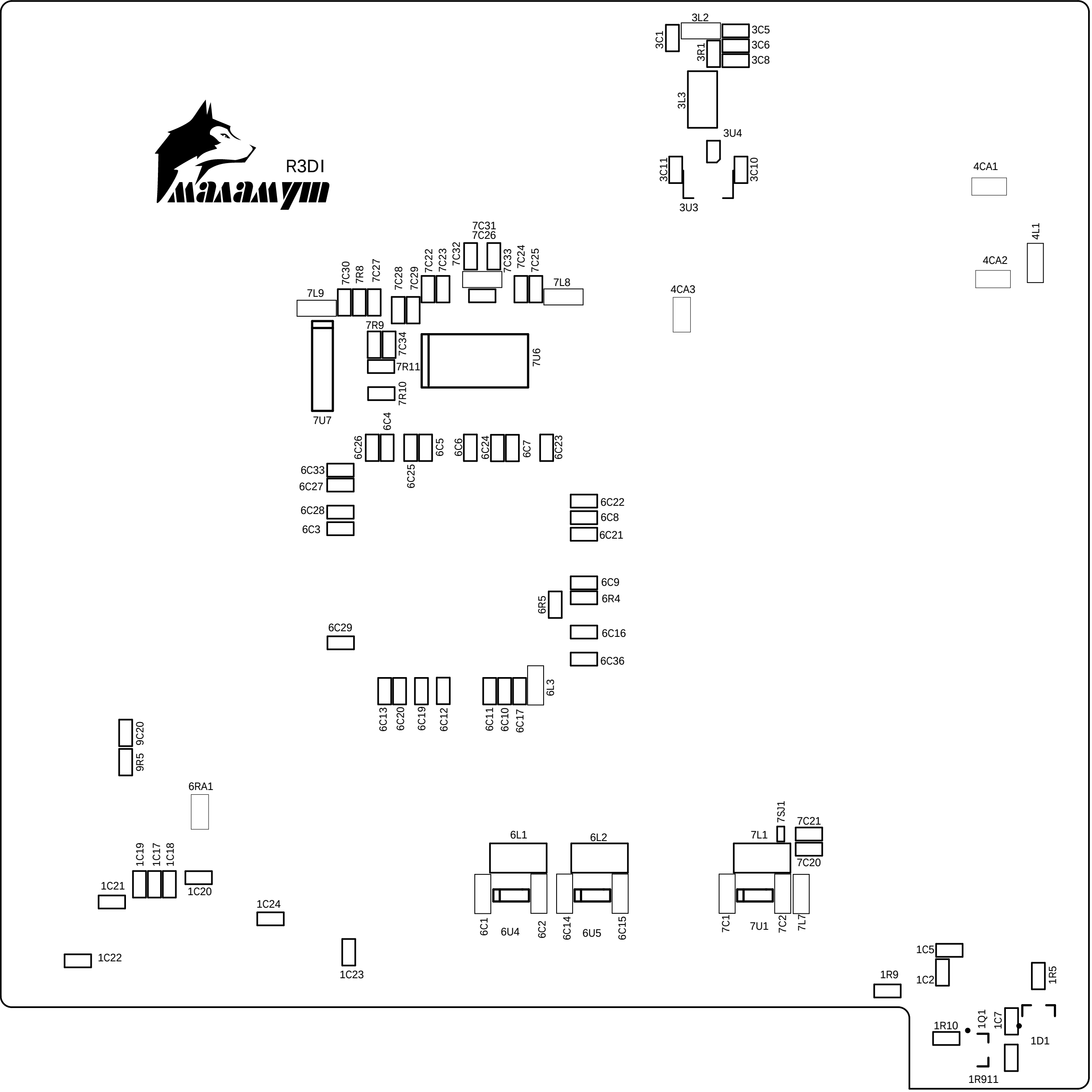
3L2
3C1
3C5
3C6
3R1
3C8
3L3
3U4
3C11
3C10
3U3
4CA1
4L1
4CA2
4CA3
7C31
7C26
7C30
7R8
7C27
7C28
7C29
7C22
7C23
7C32
7C33
7C24
7C25
7L8
7L9
7R9
7C34
7U6
7R11
7R10
7U7
6C4
6C26
6C5
6C6
6C24
6C7
6C23
6C25
6C33
6C27
6C22
6C28
6C8
6C3
6C21
6C9
6R5
6R4
6C29
6C16
6C36
6L3
6C13
6C20
6C19
6C12
6C11
6C10
6C17
9C20
9R5
6RA1
7SJ1
7C21
6L1
6L2
7L1
7C20
1C19
1C17
1C18
1C21
1C20
1C24
6C1
6U4
6C2
6C14
6U5
6C15
7C1
7U1
7C2
7L7
1C22
1C23
1C5
1C2
1R9
1R5
1R10
1Q1
1C7
1D1
1R911

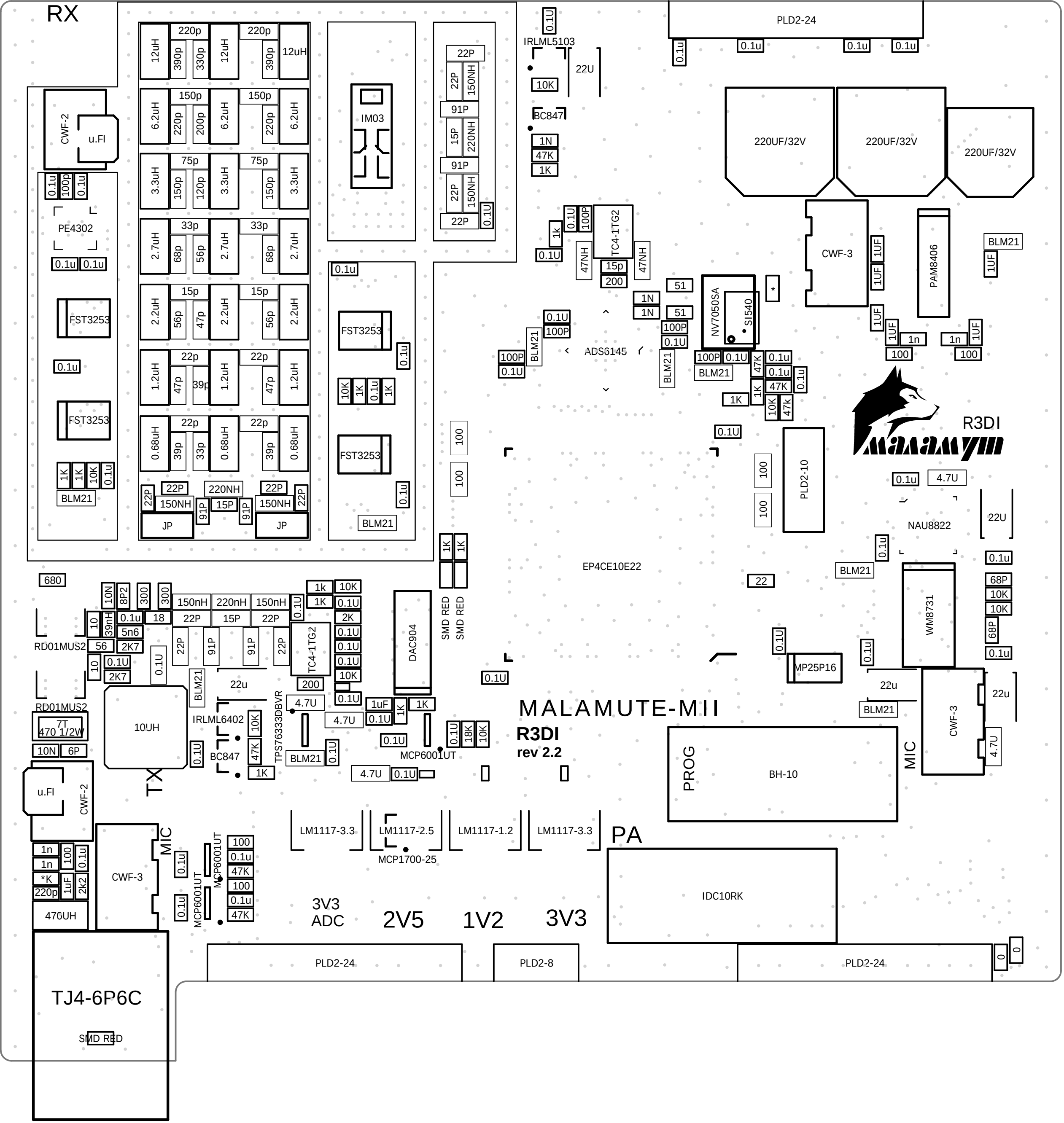
RX
CWF-2
u.Fl
PE4302
FST3253
BLM21
IM03
JP
PLD2-24
IRLML5103
BC847
22U
220UF/32V
220UF/32V
220UF/32V
TC4-1TG2
CWF-3
PAM8406
NV7050SA
SI540
ADS6145
PLD2-10
R3DI
NAU8822
EP4CE10E22
WM8731
MP25P16
MALAMUTE-MII
R3DI
rev 2.2
RD01MUS2
10UH
IRLML6402
TPS76333DBVR
DAC904
MCP6001UT
TX
MIC
PROG
BH-10
LM1117-3.3
LM1117-2.5
LM1117-1.2
LM1117-3.3
MCP1700-25
PA
IDC10RK
3V3
ADC
2V5
1V2
3V3
PLD2-24
PLD2-8
PLD2-24
TJ4-6P6C
SMD RED

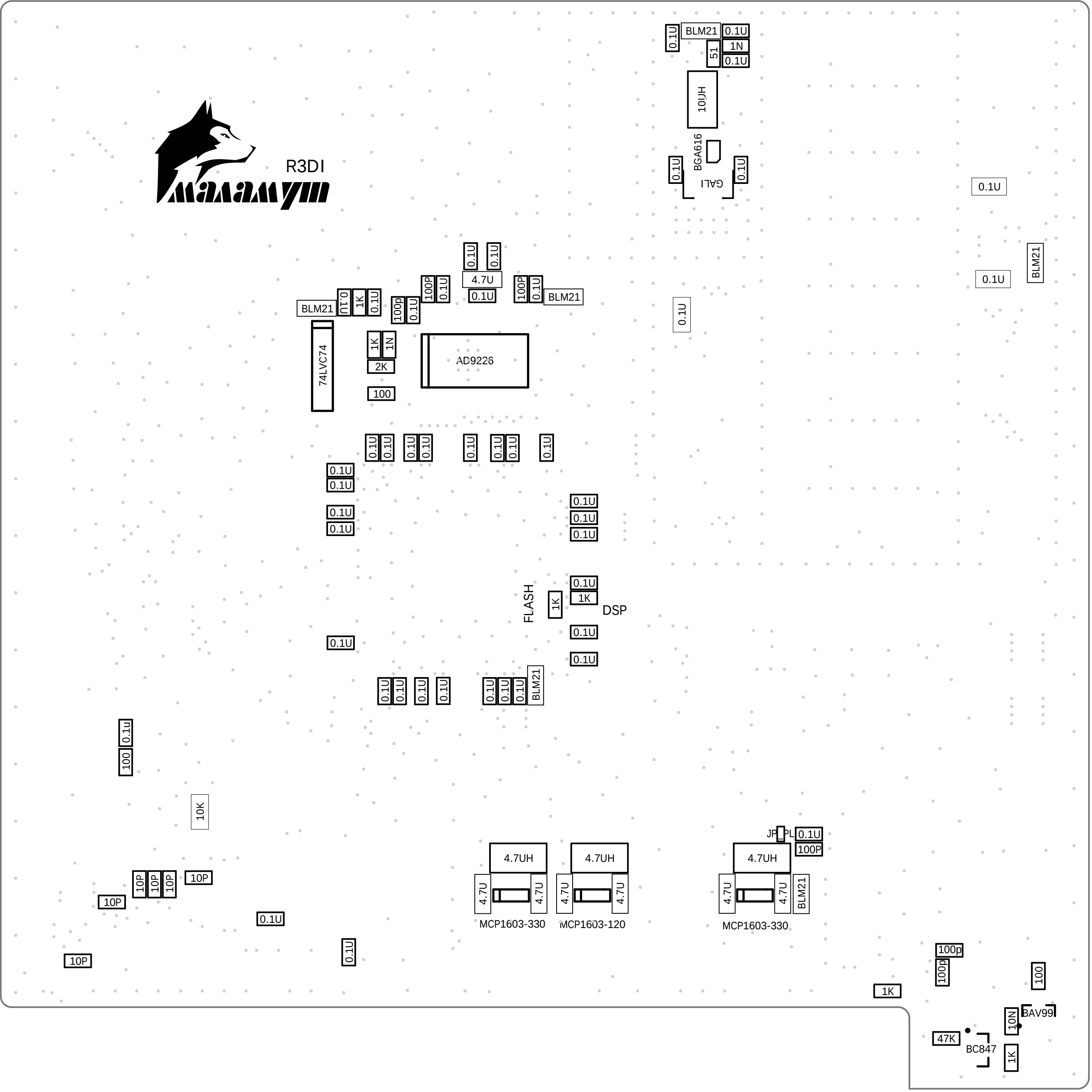
R3DI
0.1U
BLM21
0.1U
51
1N
0.1U
10UH
BGA616
GAL1
0.1U
0.1U
0.1U
BLM21
0.1U
0.1U
4.7U
0.1U
100P
0.1U
100P
0.1U
BLM21
0.1U
1K
0.1U
100p
0.1U
BLM21
74LVC74
1K
1N
2K
100
AD9226
0.1U
0.1U
0.1U
0.1U
0.1U
0.1U
0.1U
0.1U
0.1U
0.1U
0.1U
0.1U
0.1U
0.1U
FLASH
1K
DSP
0.1U
0.1U
0.1U
0.1U
0.1U
0.1U
0.1U
0.1U
BLM21
0.1u
100
10K
10P
10P
10P
10P
10P
0.1U
0.1U
4.7UH
4.7U
4.7U
MCP1603-330
4.7UH
4.7U
4.7U
MCP1603-120
JP_PL
0.1U
100P
4.7UH
4.7U
4.7U
BLM21
MCP1603-330
100p
100p
100
1K
BAV99
10N
47K
BC847
1K