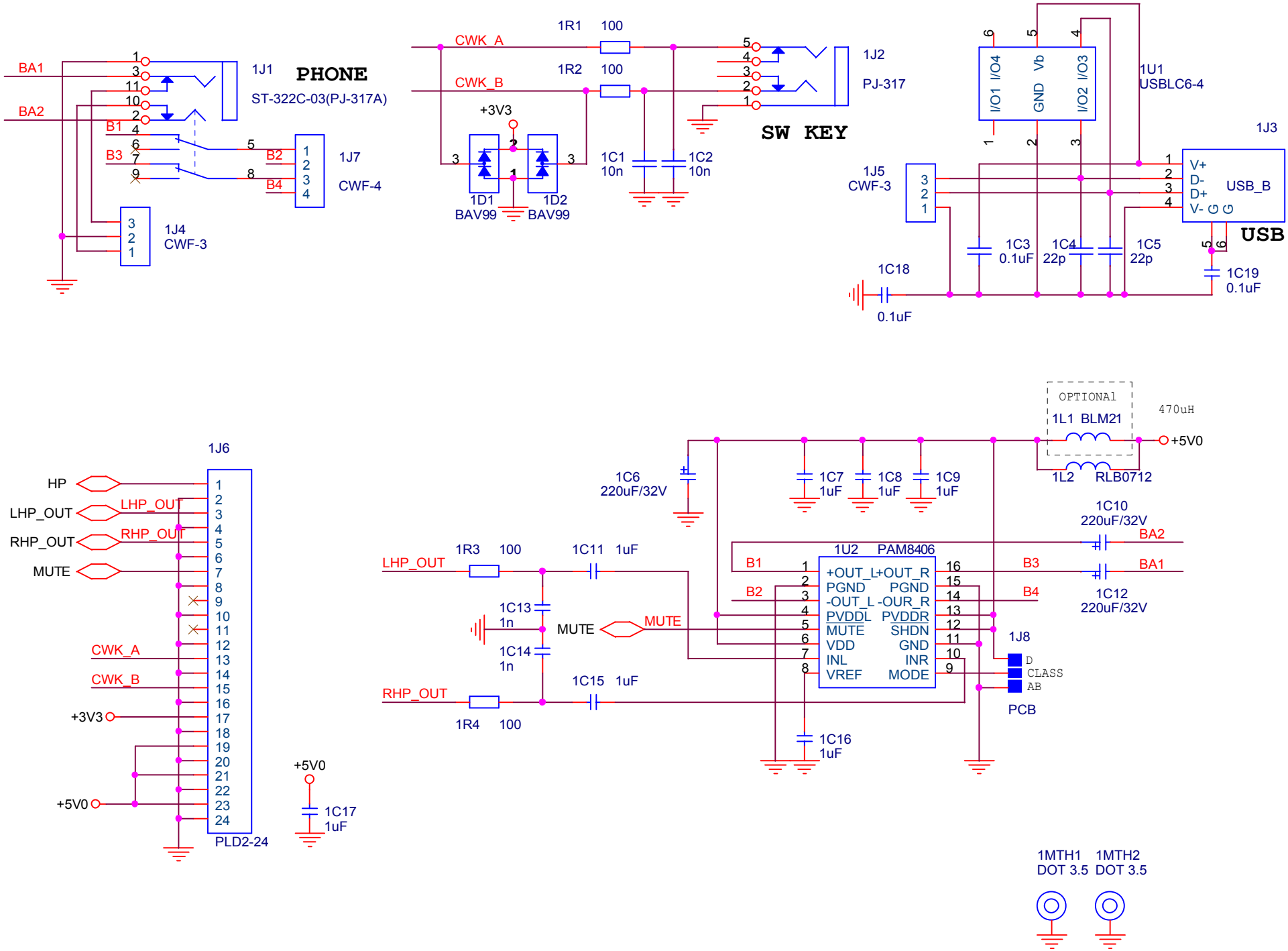
PHONE
1J1
ST-322C-03(PJ-317A)
BA1
BA2
B1
B3
B2
B4
1J7
CWF-4
1J4
CWF-3
CWK_A
CWK_B
1R1 100
1R2 100
+3V3
1D1
BAV99
1D2
BAV99
1C1
10n
1C2
10n
1J2
PJ-317
SW KEY
1U1
USBLC6-4
I/O1 I/O4
GND Vb
I/O2 I/O3
1J5
CWF-3
1J3
USB_B
V+
D-
D+
V-
USB
1C3
0.1uF
1C4
22p
1C5
22p
1C18
0.1uF
1C19
0.1uF
1J6
HP
LHP_OUT
RHP_OUT
MUTE
CWK_A
CWK_B
+3V3
+5V0
PLD2-24
+5V0
1C17
1uF
OPTIONAl
1L1 BLM21
470uH
+5V0
1L2 RLB0712
1C6
220uF/32V
1C7
1uF
1C8
1uF
1C9
1uF
1C10
220uF/32V
BA2
BA1
1C12
220uF/32V
1U2 PAM8406
+OUT_L +OUT_R
PGND PGND
-OUT_L -OUR_R
PVDDL PVDDR
MUTE SHDN
VDD GND
INL INR
VREF MODE
1R3 100
1C11 1uF
1C13
1n
1C14
1n
1C15 1uF
1R4 100
1C16
1uF
1J8
D
CLASS
AB
PCB
1MTH1
DOT 3.5
1MTH2
DOT 3.5